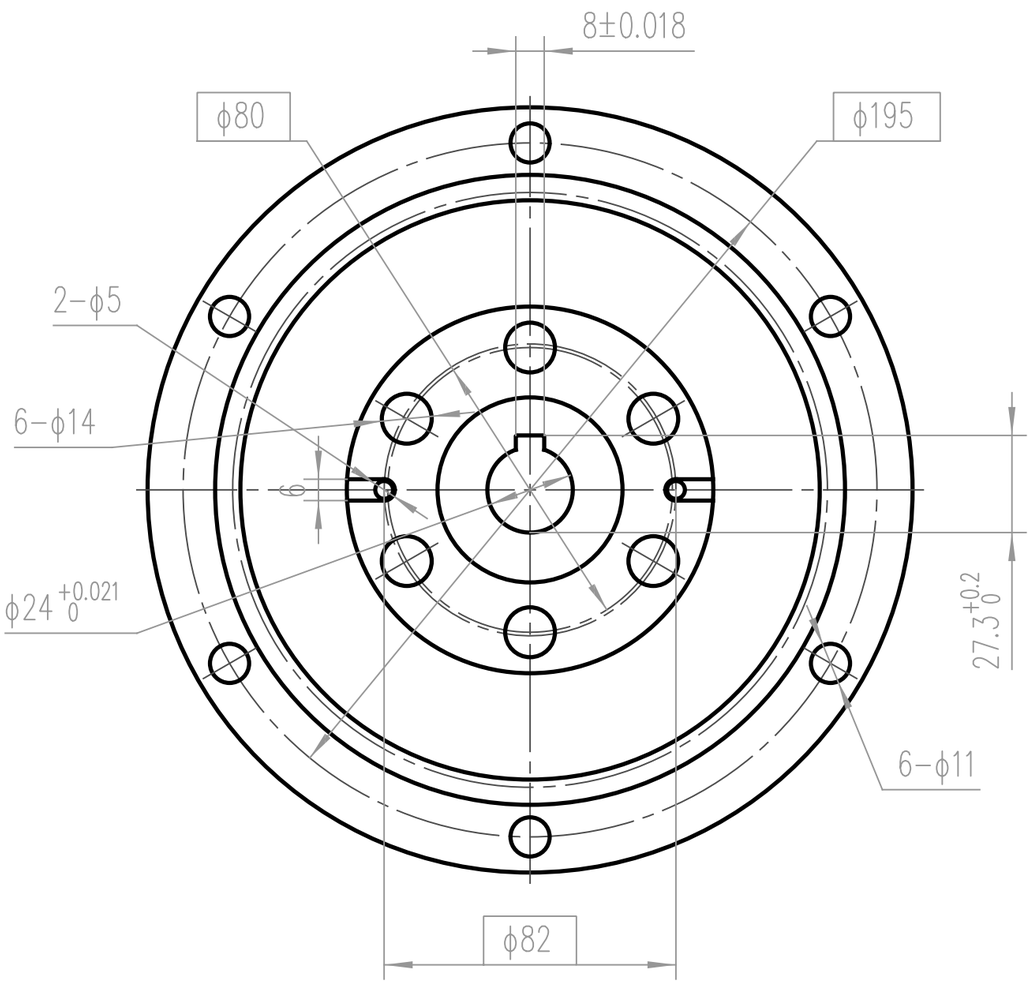

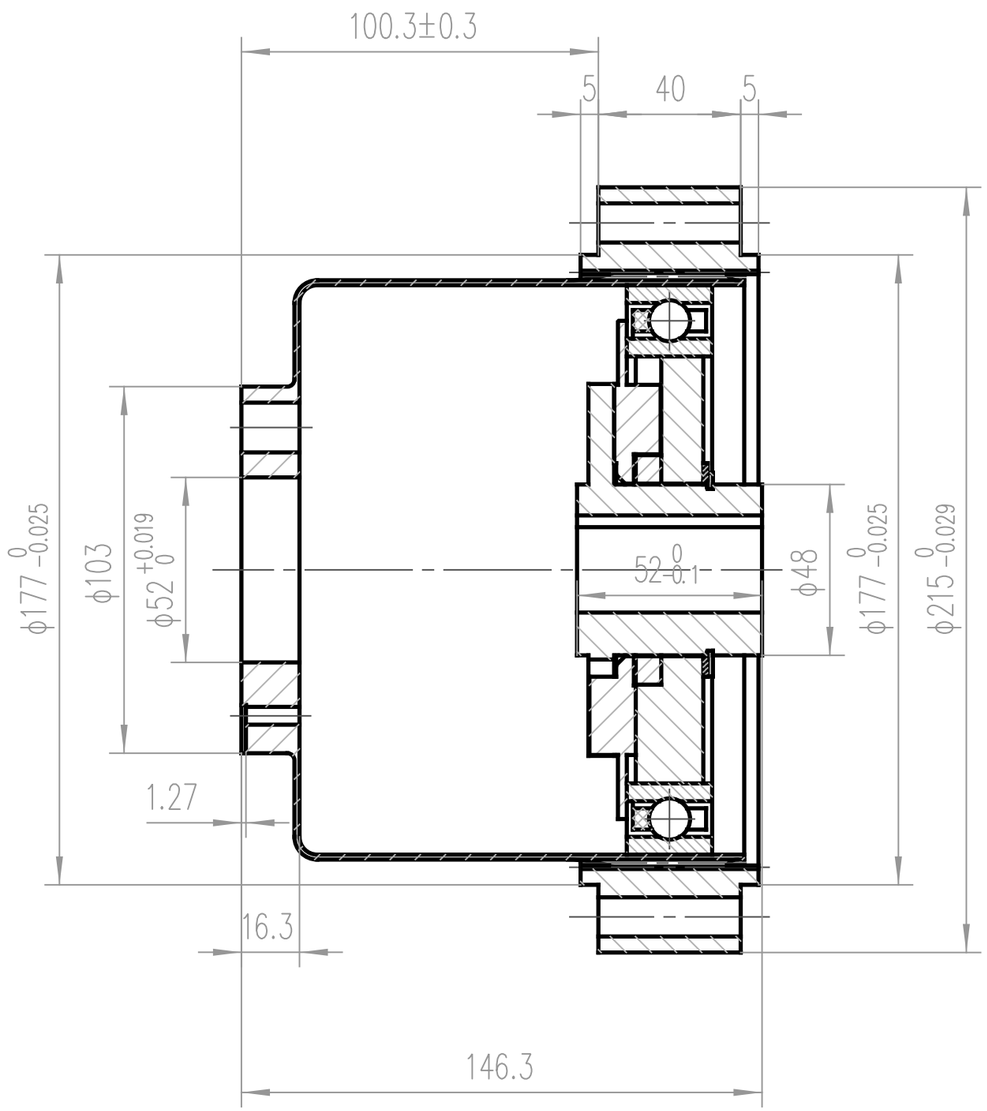

SYM	DATE	CHANGE	CHNG	APPR
		REVISIONS		

UNLESS OTHERWISE SPECIFIED
DO NOT SCALE DRAWING
* BREAK ALL SHARP EDGES *

DIMENSIONS	TOL.	MM	INCHES
	.X	± .1	±.030
	.XX	± .05	±.010
MM ☒	.XXX	± ——	±.005
INCHES ☐	FRACTIONAL		±1/64
	ANGULAR		±1/2°

63/ THIRD ANGLE PROJECTION

DRAWN BY: JSL	DATE: 06/10/12	CONIC SYSTEMS INC. HARMONIC GEARING & CONTROLS 11 REBEL LANE , PORT JERVIS, NY 12771	
CHECK BY: M.O.	DATE: 06/16/12	ASM/PART DESCRIPTION: HDC-065-XXX-M1 COMPONENT SET	
APPROVED BY:	DATE:		
MATERIAL:		REPLACES:	ASM/PART: HDC-065-XXX-M1
FINISH:		SIZE: C / SCALE: 1:1 / DWG: HDC-065-XXX-M1	REV: