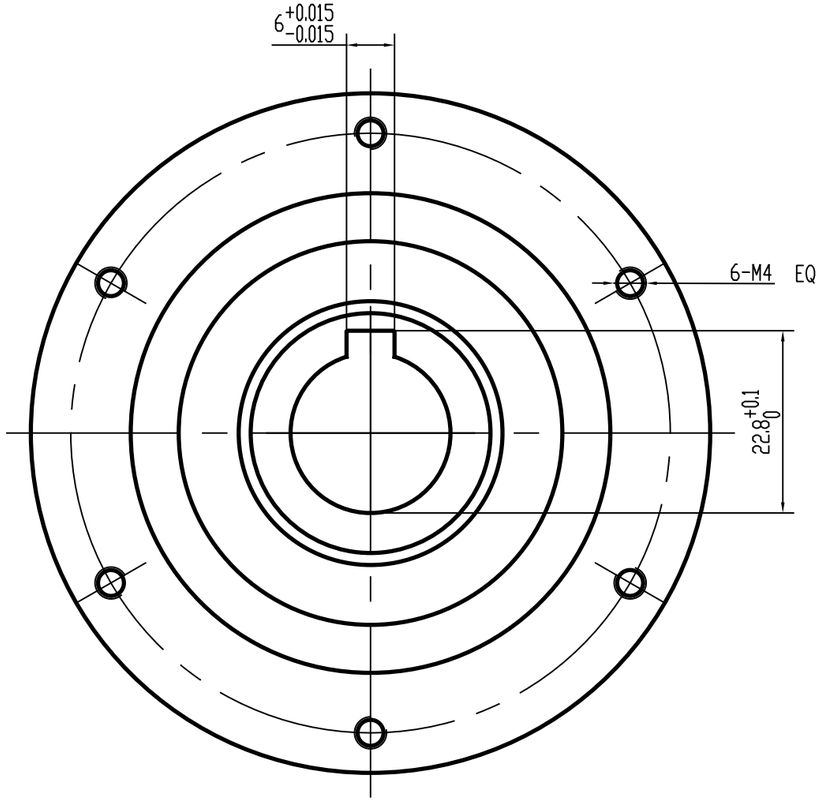

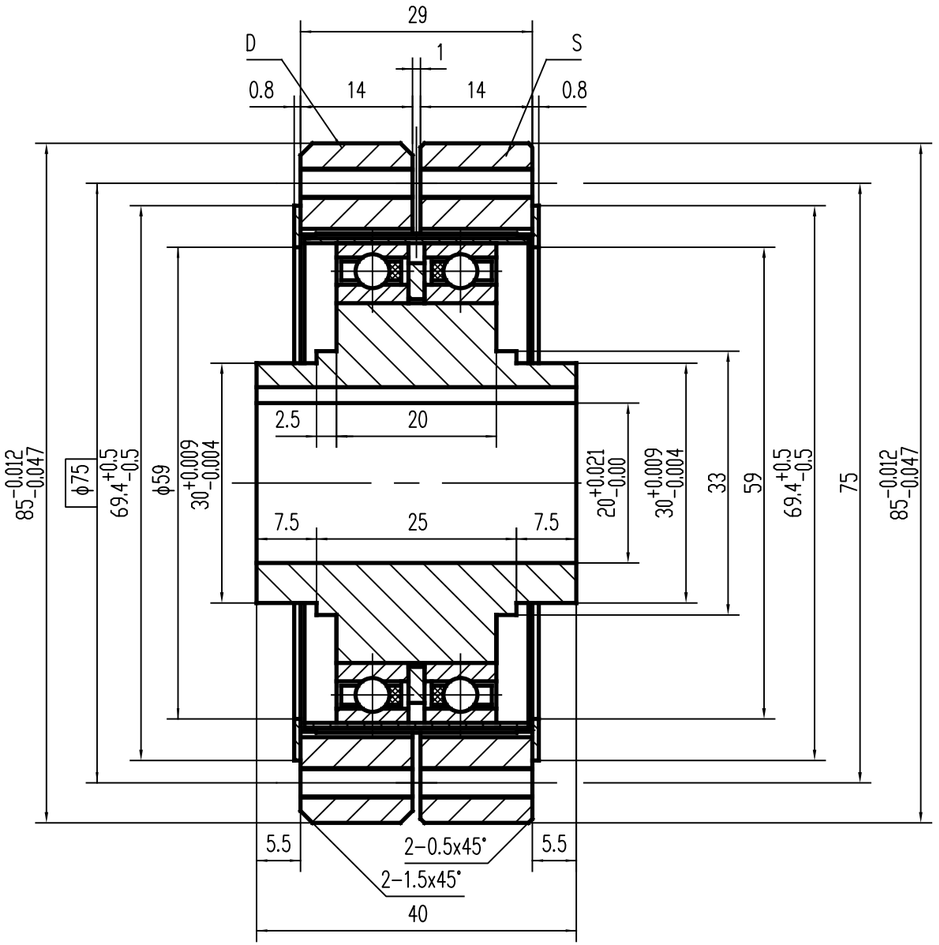

SYM	DATE	CHANGE	CHNG	APPR
		REVISIONS		

UNLESS OTHERWISE SPECIFIED
DO NOT SCALE DRAWING
* BREAK ALL SHARP EDGES *

DIMENSIONS	TOL.	MM	INCHES
MM ☒	.X	± .1	±.030
INCHES ☐	.XX	± .05	±.010
	.XXX	± ——	±.005
	FRACTIONAL		±1/64
	ANGULAR		±1/2°

FINISH 63√ THIRD ANGLE PROJECTION

DRAWN BY: JSL — DATE: 01/18/12
CHECK BY: M.D. — DATE: 06/16/12
APPROVED BY: — DATE:
MATERIAL:
FINISH:

CONIC SYSTEMS INC.
HARMONIC GEARING & CONTROLS
11 REBEL LANE , PORT JERVIS, NY 12771

ASM/PART DESCRIPTION:
HDA-025-XXX-M1
HARMONIC GEARING COMPONENT SET

REPLACES: — ASM/PART: HDA-025-XXX-M1

SIZE: C — SCALE: 1:.75 — DWG: HDA-025-XXX-M1 — REV: