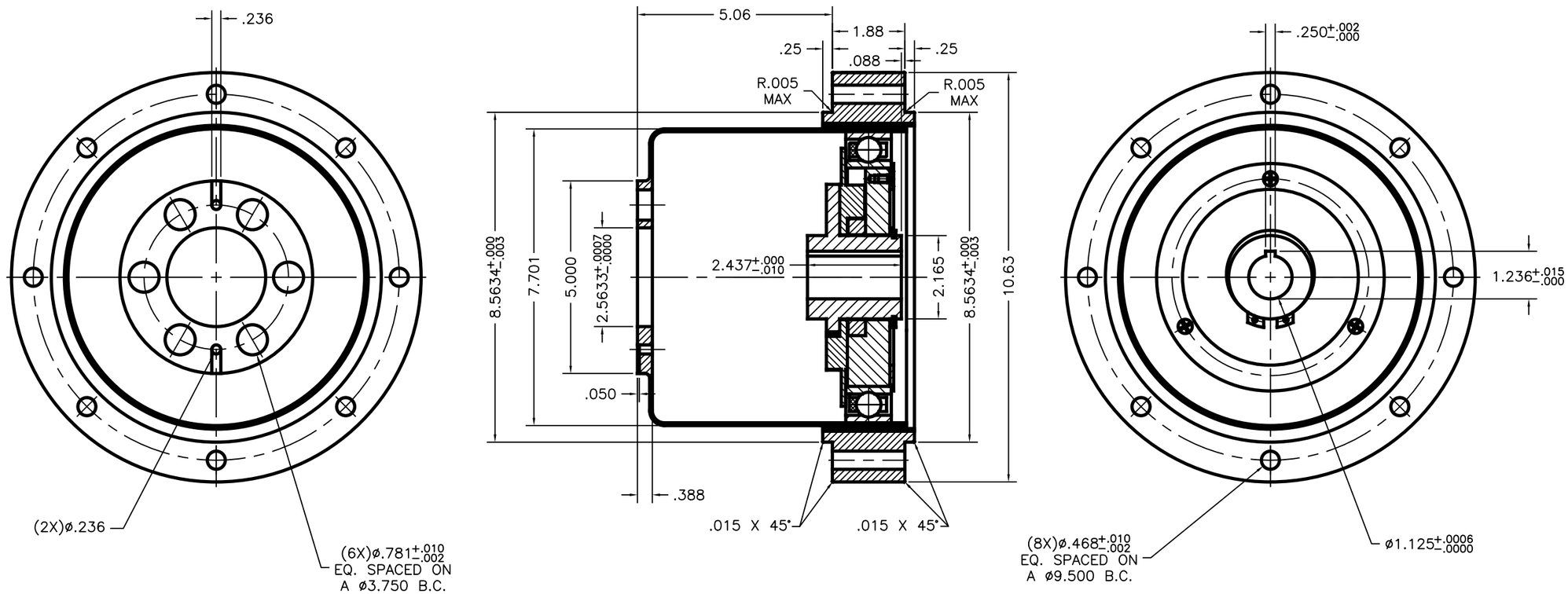

SYM	DATE	CHANGE	CHNG	APPR
		REVISIONS		

UNLESS OTHERWISE SPECIFIED
DO NOT SCALE DRAWING
* BREAK ALL SHARP EDGES *

DIMENSIONS	TOL.	MM	INCHES
MM ☐ INCHES ☒	.X	± ——	±.030
	.XX	± ——	±.010
	.XXX	± ——	±.005
	FRACTIONAL		±1/64
	ANGULAR		±1/2°

FINISH 63√ THIRD ANGLE PROJECTION

DRAWN BY: W.Y.	DATE: 02/24/10		
CHECK BY: M. O'GRADY	DATE: 02/24/10		
APPROVED BY:	DATE:		
		SIZE: C	SCALE: 1:2

CONIC SYSTEMS, INC.
HARMONIC GEARING COMPONENTS & GEARBOXES
11 REBEL LANE , PORT JERVIS, NY 12771

ASM/PART DESCRIPTION:
HDC−15M−XXX−E1
HARMONIC GEARING COMPONENT SET

REPLACES: ASM/PART:

DWG: HDC−15M−XXX−E1 REV: